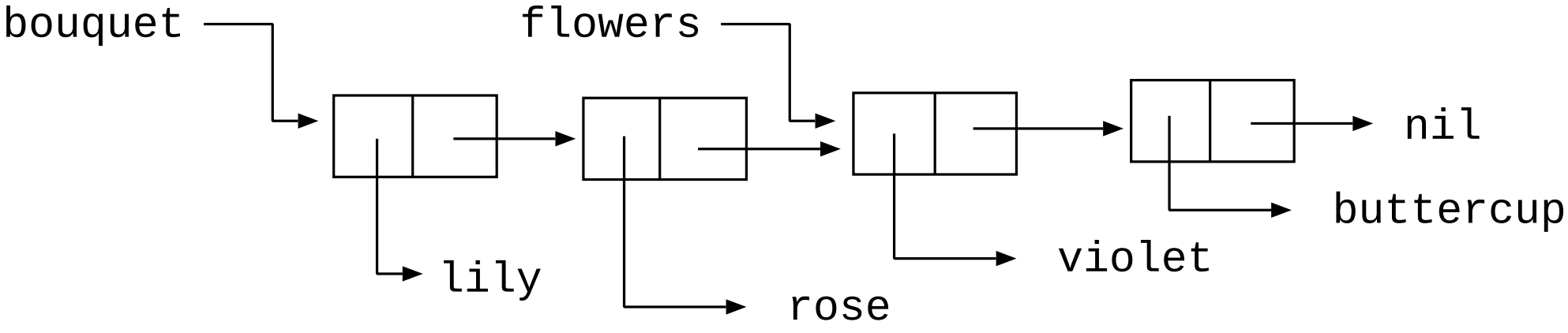
bouquet
flowers
nil
buttercup
violet
lily
rose